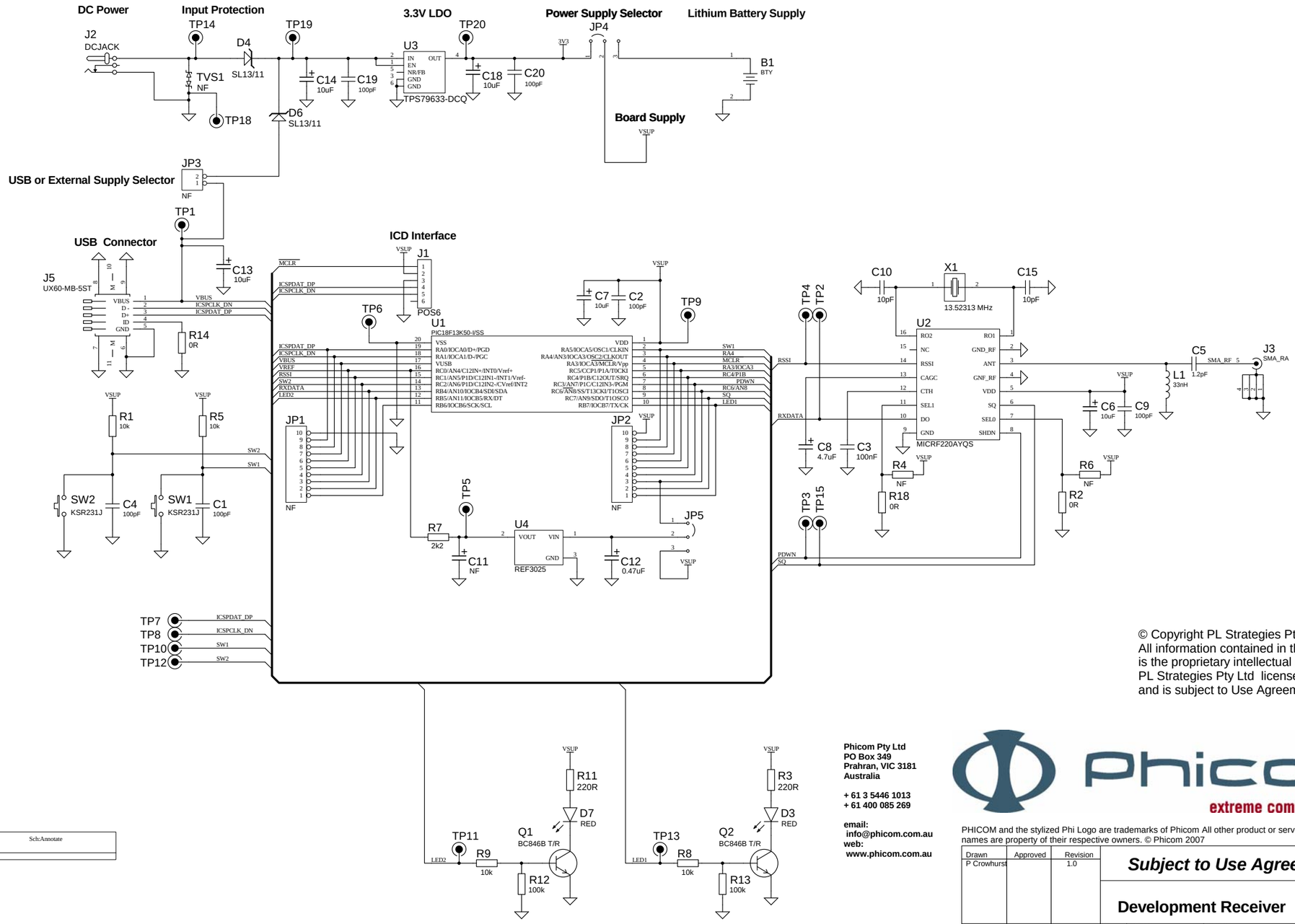

© Copyright PL Strategies Pty Ltd 2009
All information contained in this document is the proprietary intellectual property of PL Strategies Pty Ltd licensed to Phicom, and is subject to Use Agreements.

Sch:Annotate

Phicom Pty Ltd
PO Box 349
Prahran, VIC 3181
Australia

+ 61 3 5446 1013
+ 61 400 085 269

email:
info@phicom.com.au
web:
www.phicom.com.au

Phicom®
extreme communication

PHICOM and the stylized Phi Logo are trademarks of Phicom All other product or services names are property of their respective owners. © Phicom 2007

Drawn	Approved	Revision
P Crowhurst		1.0

Subject to Use Agreements

Development Receiver

Size	FCSM No.	DWG No.	Rev
A2	NA	DEV01_P18MICRF220	
Scale	NA	Sheet 1 of 3	

All information contained within this document is subject to Use Agreements